JMS AG
Jet Maintenance & Service
Rainer-Haungs-Strasse 42
77933 Lahr/Germany
Phone +49 (7821) 9 94 69 – 0
Fax +49 (7821) 9 94 69 – 100

Internet: http://www.jms.aero/
eMail: mailto:sales@jms.aero

HRB 705130 Amtsgericht Freiburg i.Br.
VAT Reg No/USt.-IdNr.: DE270217003

Doc. No. TDS J-TOW757_R04.docx

Datasheet: p/n: J-TOW757

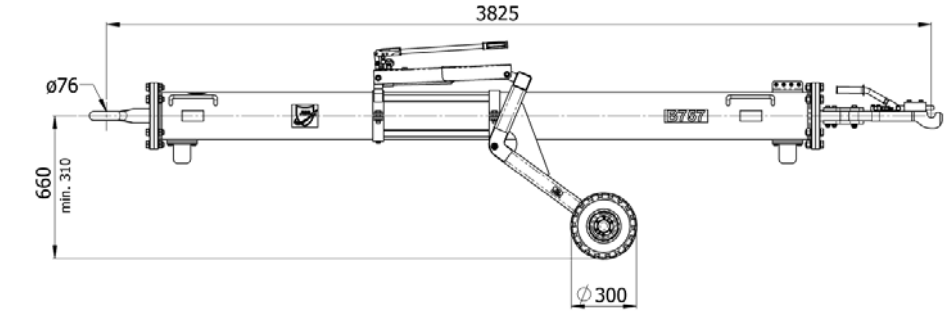

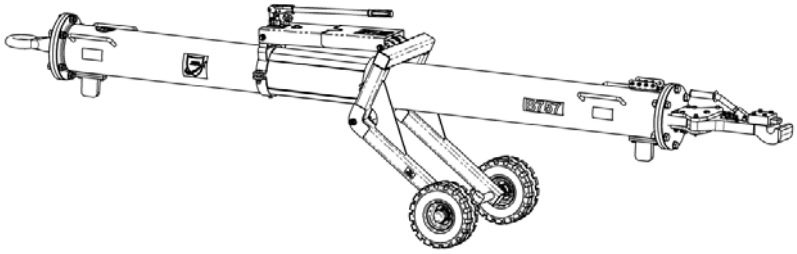

Standard features:

- Push/Pull and torque shear pins
- 4 spare shear pins included
- Retaining pin
- Air-inflated tires
- Hydraulically height adjustable undercarriage
- Steel tube
- Skydrol resistant paint
- Standard colors: yellow RAL 1007 (tube), black RAL 9004 (undercarriage)

Options (at extra charges):

- Puncture-proof tires
  ➔ Option R3
- Floating axle
  ➔ Option AV
- Revolving tow-eye
  ➔ Option AP
- Revolving tow-eye with shock absorber
  ➔ Option AA
- Customized color for tow-bar tube i.a.w. RAL coding scheme
  ➔ Option A-RAL

Aircraft application:

- B757 -200/ -300

Net weight:

- 270 kg / 595 lbs

Documentation:

- Technical manual incl. illustrated spare parts list
- COC Certificate of Conformity
- CE Declaration of Conformity

Shear pins:

- 00.40100.0016 “P1” Push/Pull and Torque
- 00.40100.0018 “P1-FB” Retaining pin

Shipping information incl. packing:

Approx. Weight	**Approx. shipping Dims** l x w x h	**Approx. Volume**
[kg] **335**	[mm] **4000** x **1000** x **760**	[m³] **3,0**
[lbs] **738**	[inch] **157** x **39** x **30**	[ft³] **106**

We reserve the right to update this datasheet at any time w/o prior notice!